Rev A	Initial Release 05/07/2004

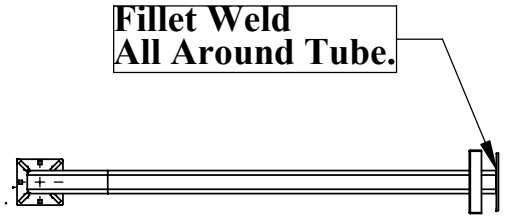

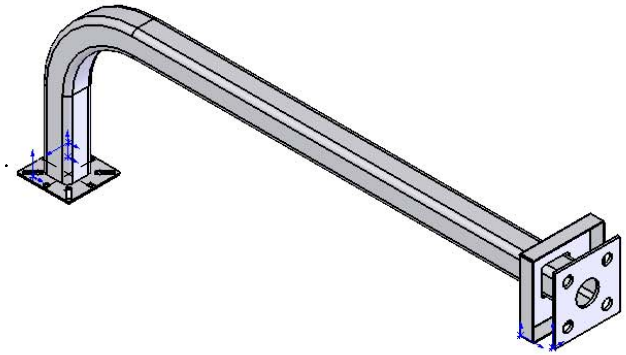

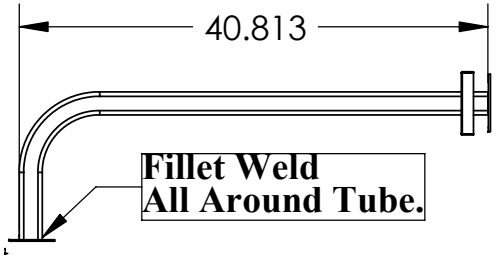

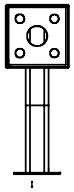

		UNLESS OTHERWISE SPECIFIED:		NAME	DATE
		DIMENSIONS ARE IN INCHES TOLERANCES: FRACTIONAL ± ANGULAR: MACH ± BEND ± TWO PLACE DECIMAL ± THREE PLACE DECIMAL ±	DRAWN	He.Sales	05/07/2004
			CHECKED		
			ENG APPR.		
			MFG APPR.		
		INTERPRET GEOMETRIC TOLERANCING PER:	Q.A.		
		MATERIAL See Details	COMMENTS:		
NEXT ASSY	USED ON	FINISH Powder Black Standard			
APPLICATION		DO NOT SCALE DRAWING			

TITLE: **Single Height Pedestal Ceo Pike Goss Owner/Operator**

SIZE	DWG. NO.	REV
A	42-9C	A

SCALE: 1:1 | WEIGHT: | SHEET 1 OF 1

PROPRIETARY AND CONFIDENTIAL

THE INFORMATION CONTAINED IN THIS DRAWING IS THE SOLE PROPERTY OF PEDESTAL CEO. ANY REPRODUCTION IN PART OR AS A WHOLE WITHOUT THE WRITTEN PERMISSION OF PEDESTAL CEO IS PROHIBITED.

5 4 3 2 1